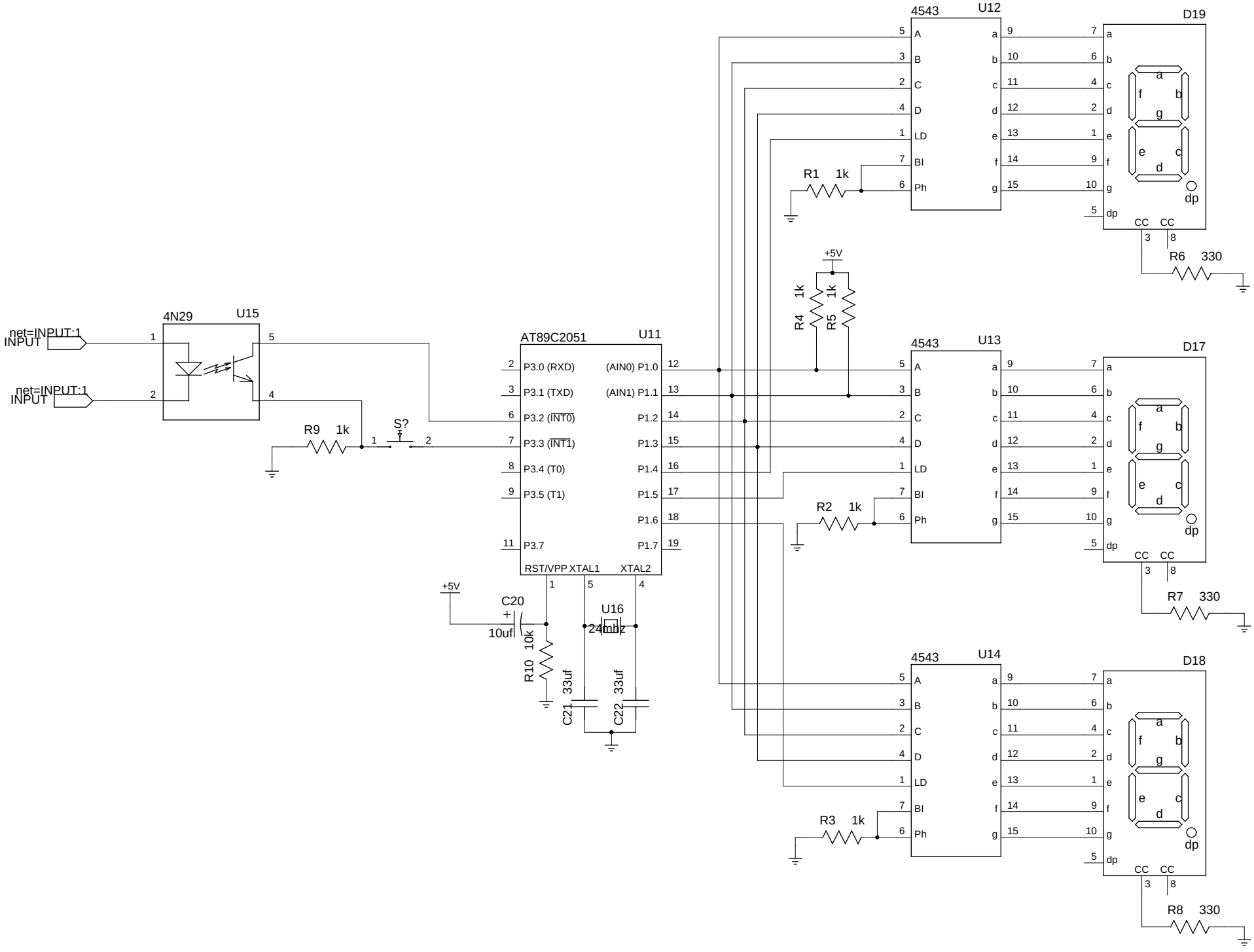
4N29
U15
net=INPUT:1
INPUT
net=INPUT:1
INPUT
R9 1k
S?
AT89C2051
U11
P3.0 (RXD)
P3.1 (TXD)
P3.2 (INT0)
P3.3 (INT1)
P3.4 (T0)
P3.5 (T1)
P3.7
(AIN0) P1.0
(AIN1) P1.1
P1.2
P1.3
P1.4
P1.5
P1.6
P1.7
RST/VPP XTAL1 XTAL2
+5V
C20
10uf
R10 10k
U16
24mhz
C21 33uf
C22 33uf
4543
U12
R1 1k
R4 1k
R5 1k
+5V
4543
U13
R2 1k
4543
U14
R3 1k
D19
D17
D18
R6 330
R7 330
R8 330